NOTES:

1-FINISH 125u UNO
2-MATERIAL: CAST IRON
3-UNITS: INCHES
4-LINEAR TOLERANCES:+/-0.01 IN
5-ANGULAR TOLERANCES:+/-0.1°

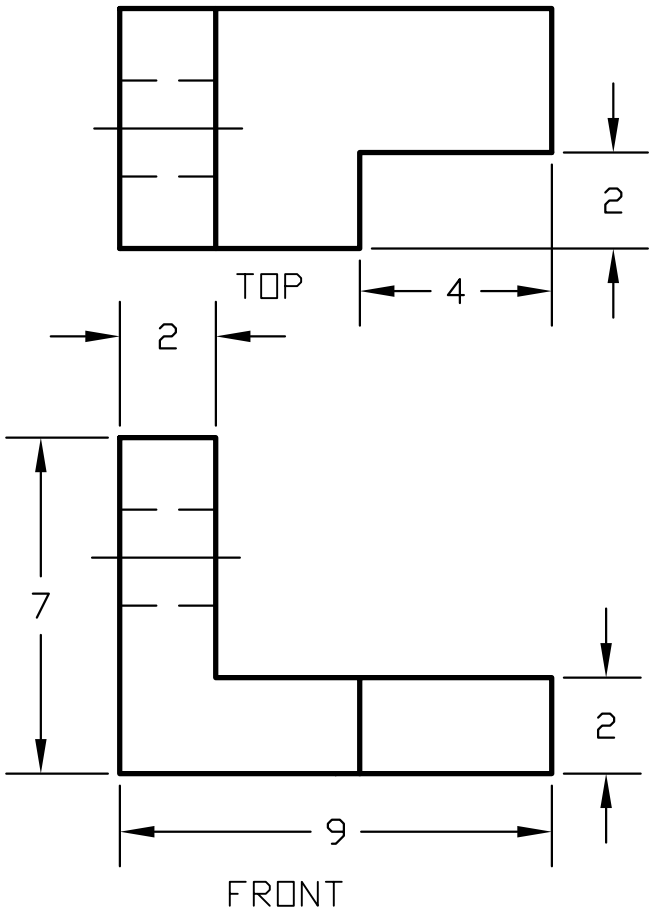

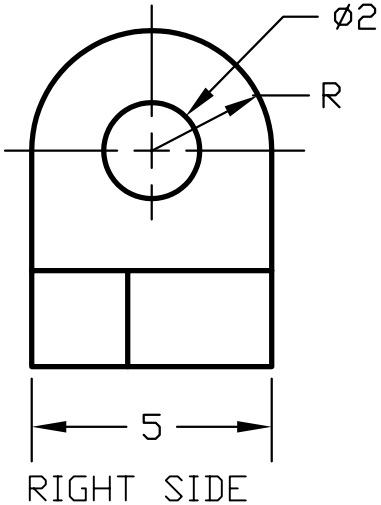

GRADE:	TITLE: 1I	
NAME:		COLLEGE: CUESTA
INST: JEFF JONES	CLASS: ENGR26	SECTION:
DATE:	SCALE: 1:4	SHEET: 1/1